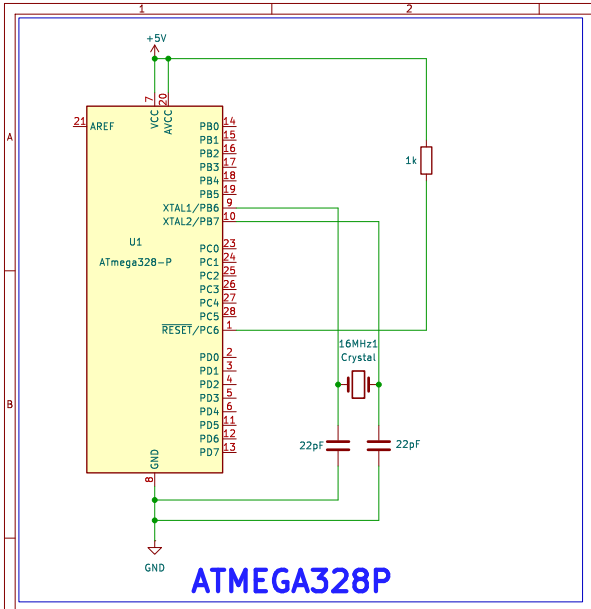

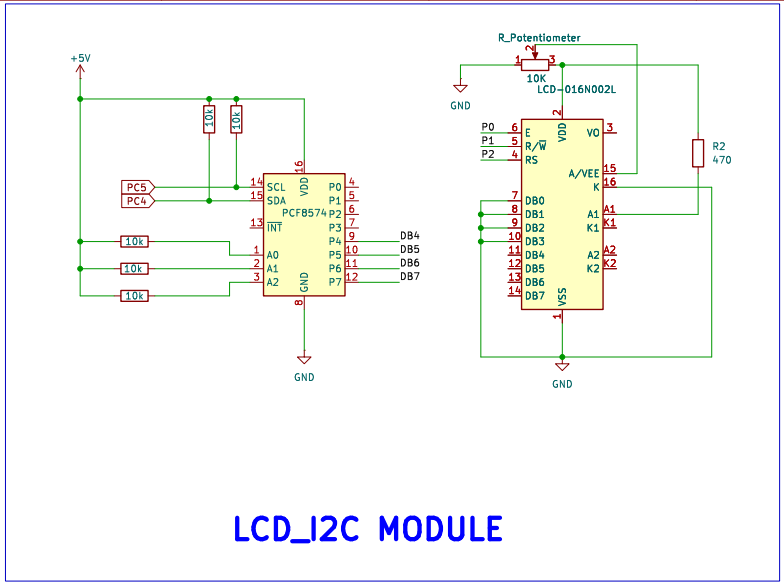

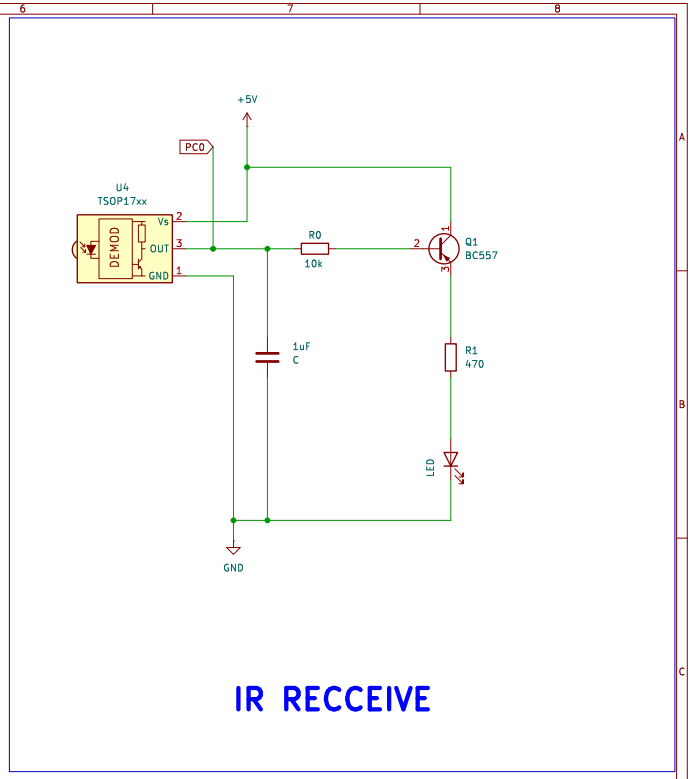

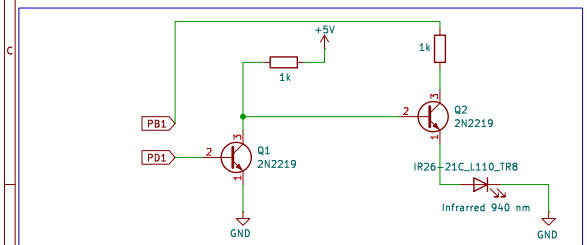

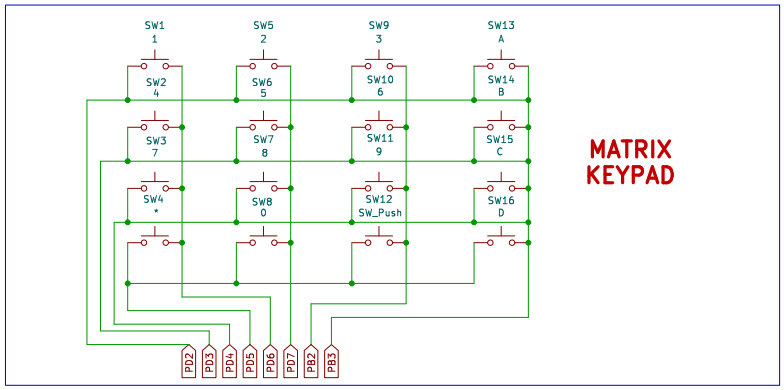

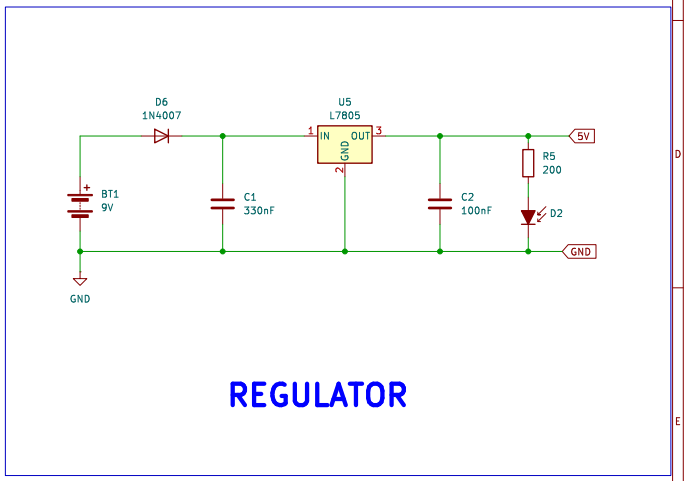

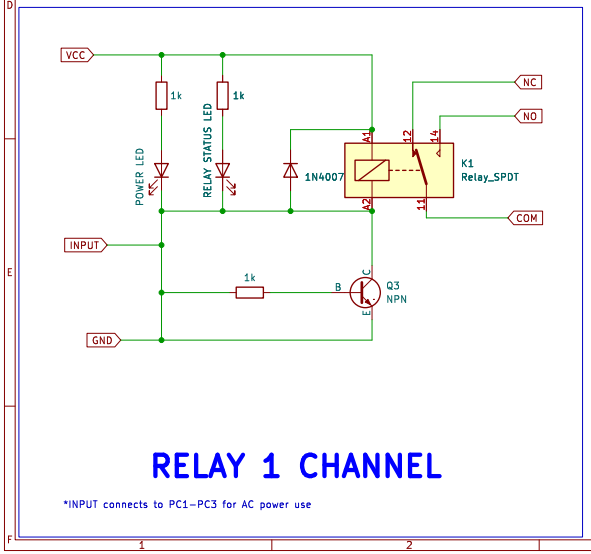

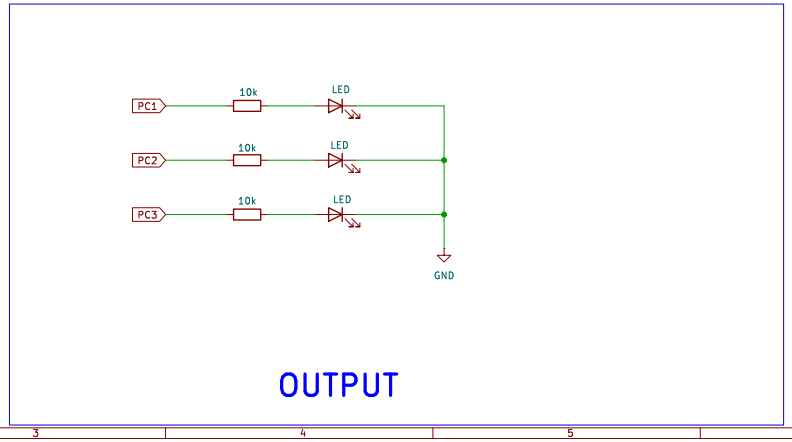

PROJECT IR REMOTE

Sheet: /
File: IR_REMOTE_CONTROL.kicad_sch

Title: PROJECT IR REMOTE

Size: A3	Date: 2026-02-21	Rev: 1.0
KiCad E.D.A. 9.0.7		Id: 1/1